Hochschule für Angewandte Wissenschaften Hamburg
Hamburg University of Applied Sciences

AIRCRAFT DESIGN AND SYSTEMS GROUP (AERO)

An Optiomal APU for Passenger Aircraft

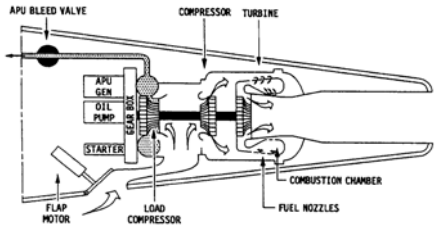

Dieter Scholz

Hamburg University of Applied Sciences

Based on the two project reports of
Johan Peterson and Tom Alisch

Independent Study.
No Funding.

5th CEAS Air and Space Conference 2015

Delft, 07.-11. September 2015

Content

- Introduction
- APU Description
- APU History
- APU Operation
- APU – Stakeholder Views
- APU Characteristics
- Potential Savings without an APU
- APU Alternatives
- Summary and Conclusions

Introduction

Proposal

- Offer the **APU only as an option**.
- Aircraft prepared for **possible addition of the APU later in the life of the aircraft**.

Research Hypothesis

- An **aircraft type with an optional APU** (with the option not selected when the aircraft is ordered) **has economical and ecological advantages** in operation compared to an aircraft not offering an opt-out from the APU.

Simple Argument for the Benefits of the Proposal

- **Omitting the APU all together saves mass** (fuel, emissions) **and costs** (maintenance costs, purchase costs and depreciation)

Heuristic (mental shortcut) **and Warning**

- **If saving money would be so easy, the aircraft without APU would have been considered already and would be on offer**.
- There must be some economical disadvantage not having an APU!

Definition (AGARD):

10714

auxiliary power unit (APU) An independent engine and ancillary equipment to provide power for auxiliary services and some main services in emergency.

DE 1. Hilfsenergieeinheit *(f)*
2. Hilfsaggregat *(n)*
3. Hilfsgasturbine *(f)*

ES unidad *(f)* de potencia auxiliar (APU)

FR générateur *(m)* auxiliaire de bord

HE 1. *βοηθητική πηγή (f) ἰσχύος* (ΑΙΙΘ)
2. *βοηθητική μονάς (f) ἰσχύος*

IT unità *(f)* di potenza ausiliaria (APU)

NE hulpaggregaat *(n)*

PO unidade *(f)* auxiliar de potência (APU)

RU 1. вспомогательная силовая установка *(f)*
2. ВСУ *(abbr)*

TU yardımcı güç ünitesi

AGARD
ADVISORY GROUP FOR AEROSPACE RESEARCH & DEVELOPMENT

MULTILINGUAL
AERONAUTICAL DICTIONARY

Definition (ATA 100):

CHAP	SECTION	TITLE	DEFINITION
49		AIRBORNE AUXILIARY POWER	Those airborne power plants (engines) which are installed on the aircraft for the purpose of generating and supplying a single type or combination of auxiliary electric, hydraulic, pneumatic or other power. Includes power and drive section, fuel, ignition and control systems; also wiring, indicators, plumbing, valves, and ducts up to the power unit. Does not include generators, alternators, hydraulic pumps, etc. or their connecting systems which supply and deliver power to their respective aircraft systems.

Air Transport Association

(These are part of other systems.)

Definition (CS-Definitions, JAR-1):

Definitions applicable to auxiliary power units:

'**Auxiliary Power Unit (APU)**' means any **gas turbine-powered unit** delivering rotating shaft **power**, compressor air, or both which is **not intended for direct propulsion** of an aircraft.

'**Essential APU**' means an APU which produces bleed air and/or power to drive accessories **necessary for the dispatch of the aircraft** to maintain safe aircraft operation.

'**Non-essential APU**' means an APU which may be **used on the aircraft as a matter of convenience**, either on the ground or in flight, and may be shut down without jeopardising safe aircraft operations.

'**Compressor air**' means compressed air that is provided by the APU to do work whether it is extracted or **bled** from any point of the compressor section of the gas turbine engine **or taken from a [separate] compressor** driven by the APU.

APU Schematic for the Airbus A340

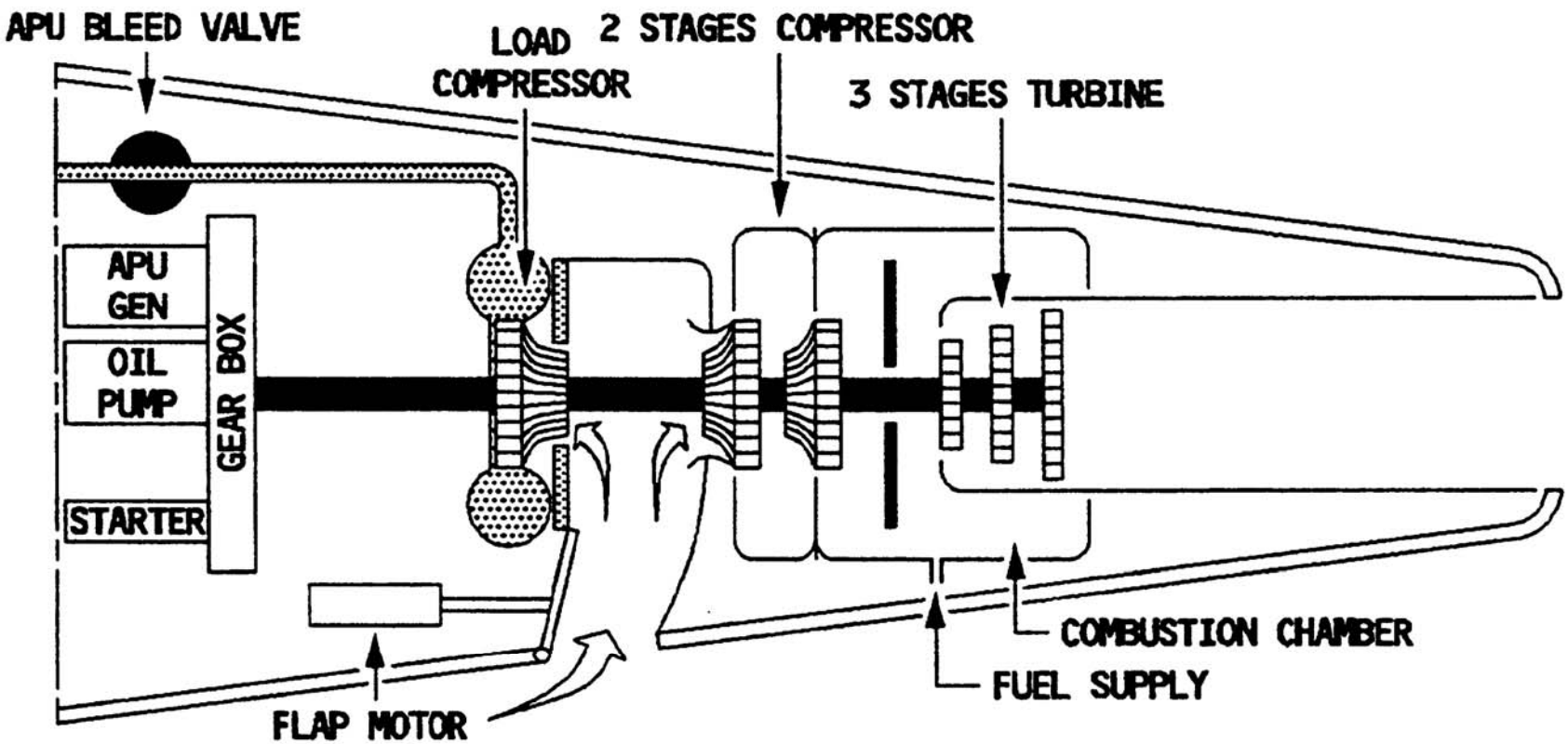

APU Schematic for the Airbus A320

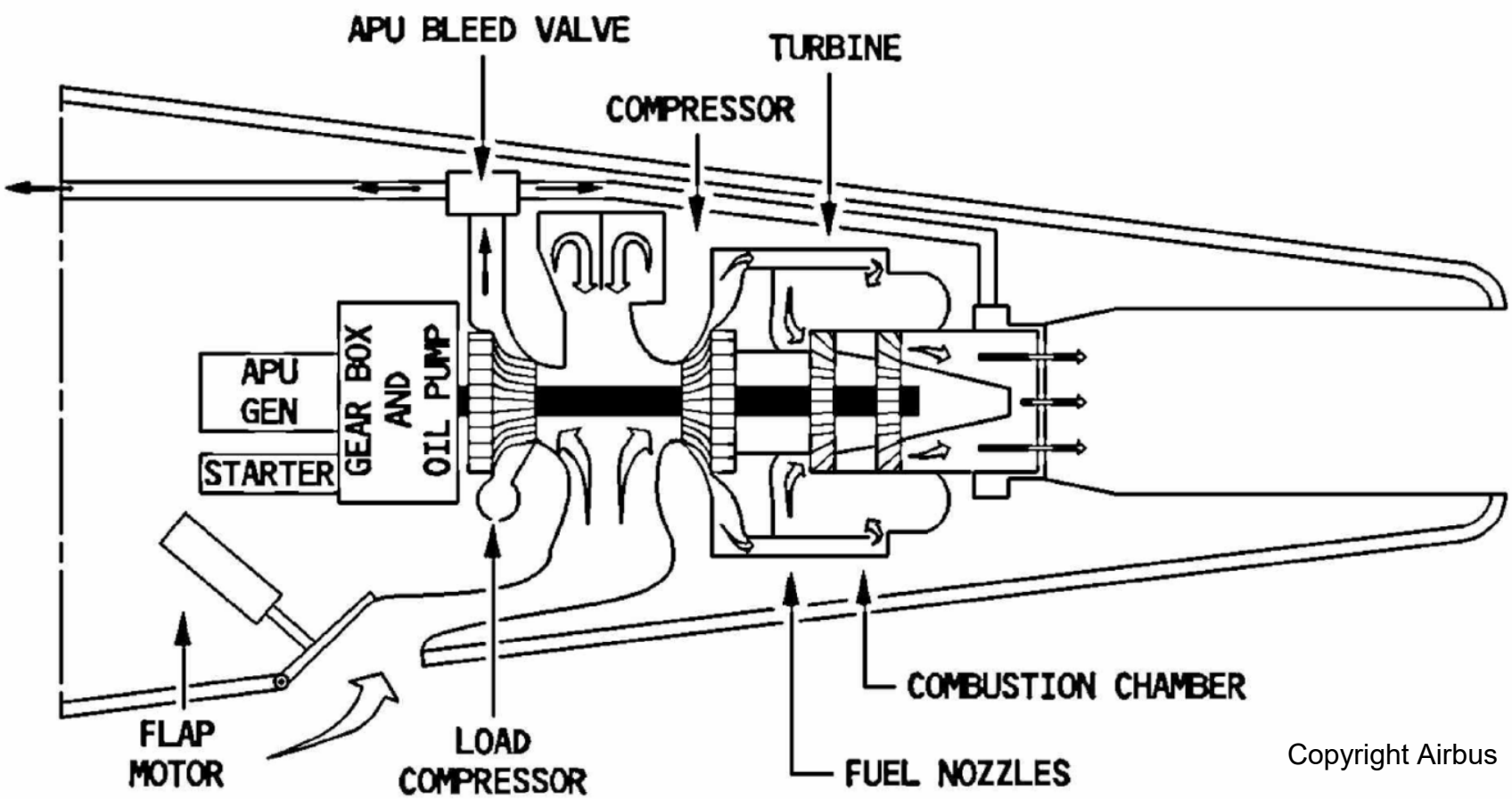

APU installation of an Airbus A320

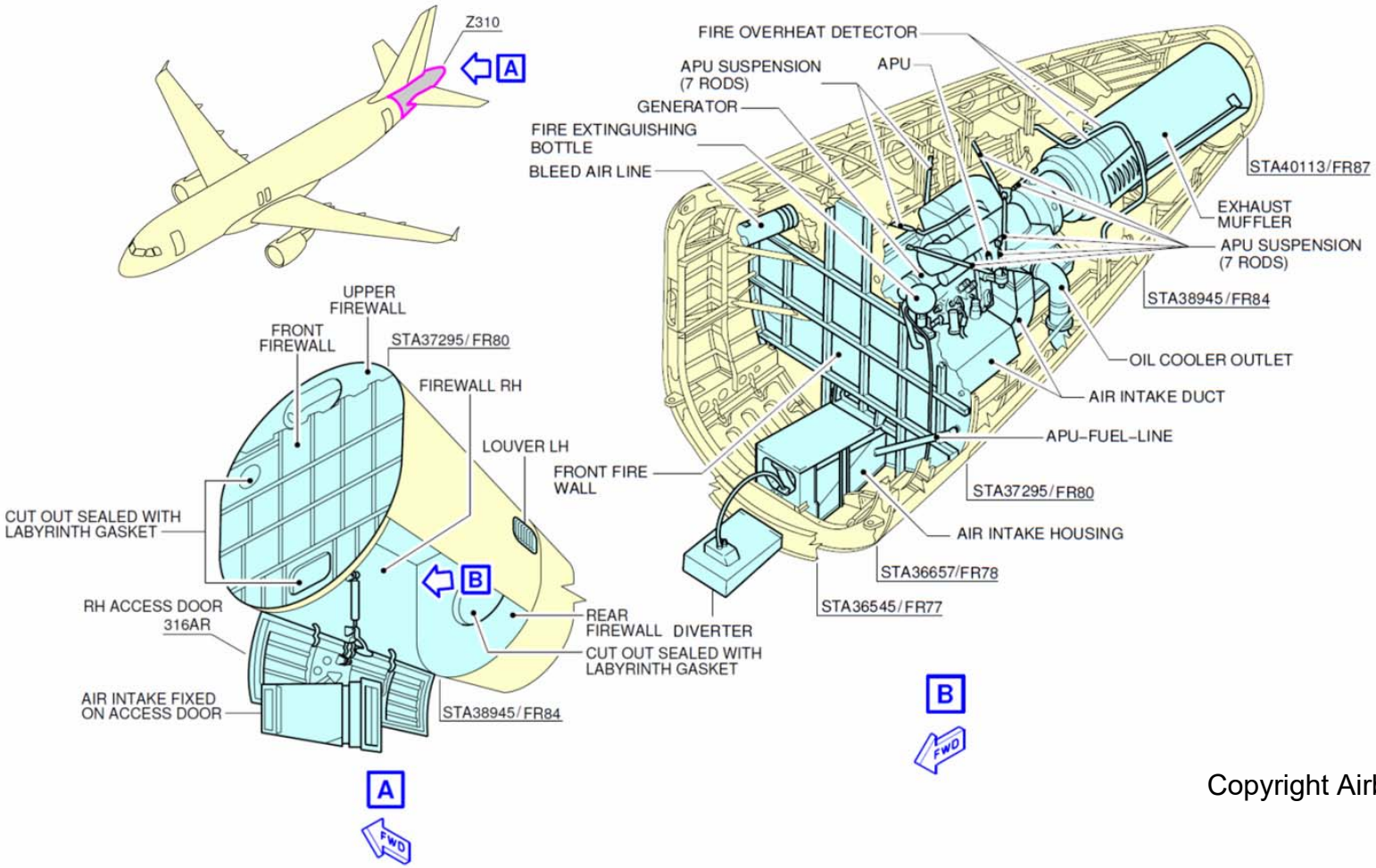

APU for the Airbus A320 – Garret GTCP 36-300

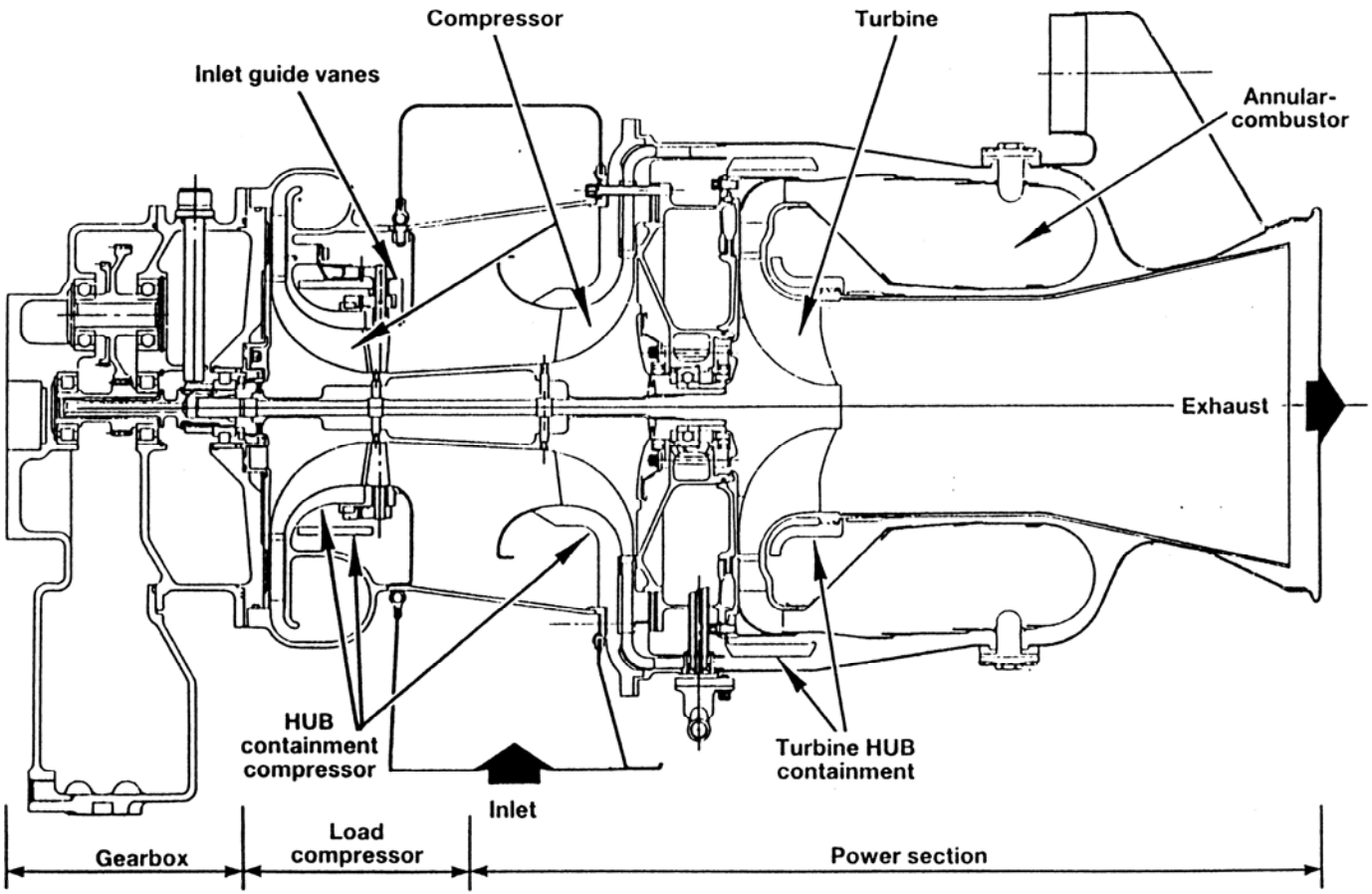

APU History – Example: Boeing – Summary

- Operation of the Boeing **707 relied on ground services** or high pressure air bottle(s).
- The Boeing **727 was the first aircraft that was equipped with an APU**.
- The Boeing 727 was intended to be **operated** on routes to smaller airports **where ground services would not always be available**.
- In the Boeing **727 the APU only provides power on ground** and cannot be started while airborne. And since it has 3 engines the extra redundancy of the APU was not needed.
- The APU in the 727 is placed in the belly of the aircraft and the air-intake is placed in the wheel well. Which means once the landing gear has been raised the APU has no access to air and will flame out.
- The Boeing **737 uses the APU both on ground and in the air**. This is mainly due to the **two engine design**, and the fact that the aircraft (until the 737 max) **lacks a Ram Air Turbine** (RAT).
- The early Boeing **747** had an APU that was only certified for ground use, this is due to the fact that it has **4 engines providing sufficient redundancy**. Today, the 747 is certified to run up to 6100 m.
- The APU of the Boeing 767 is used for ground power and as emergency **backup power in flight**.
- The Boeing 777 has an APU that can be run both on ground and in flight, due to the **ETOPS** regulations.
- The Boeing **787 has an APU which delivers only electrical power** – no compressed air.

Garret GTCP85 Installations

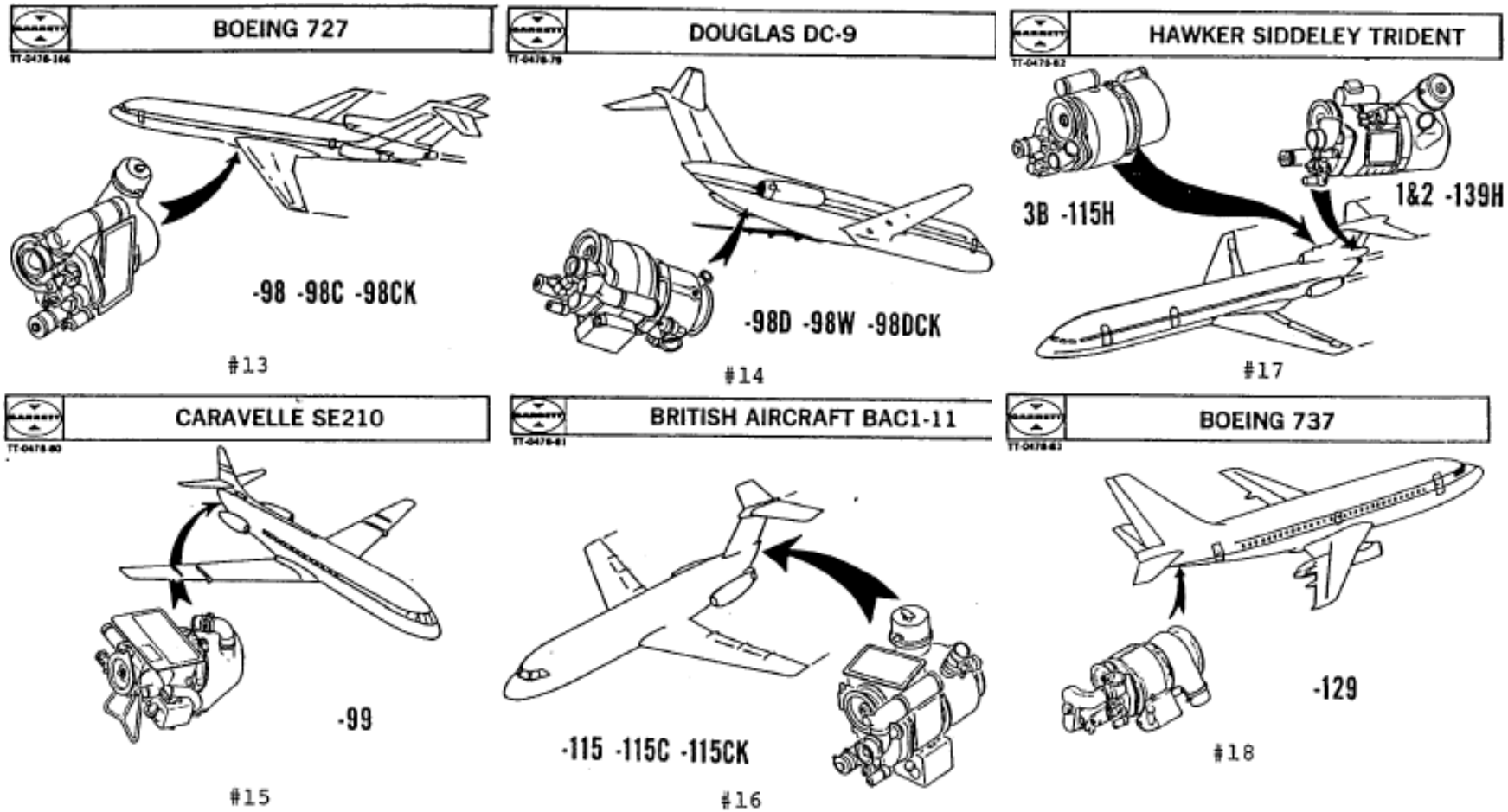

Garret GTCP85 – Compressor Air Used as as Bleed Air

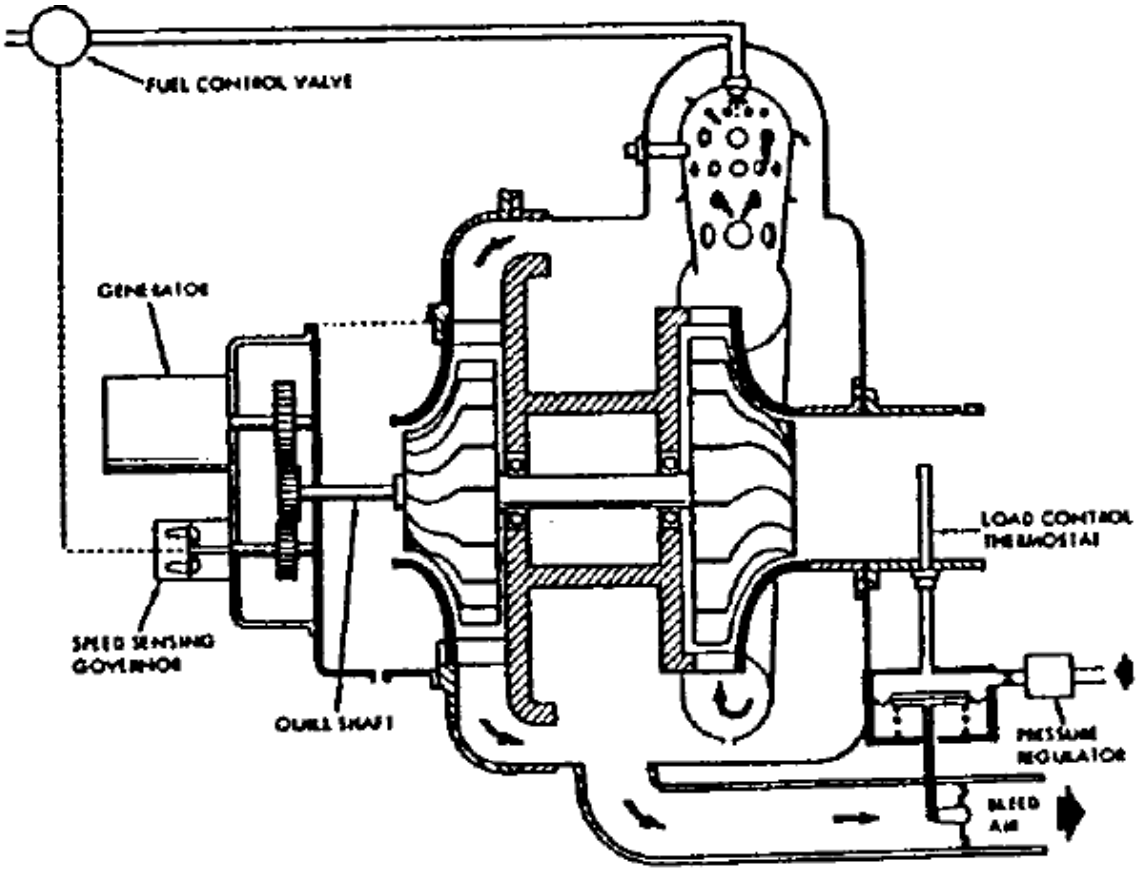

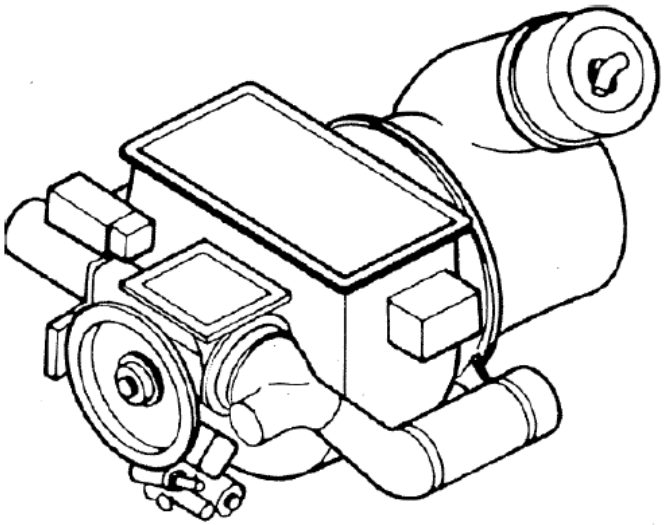

APU History

Later APU for the Boeing 737 Allied Signal (Honeywell) 131-9B

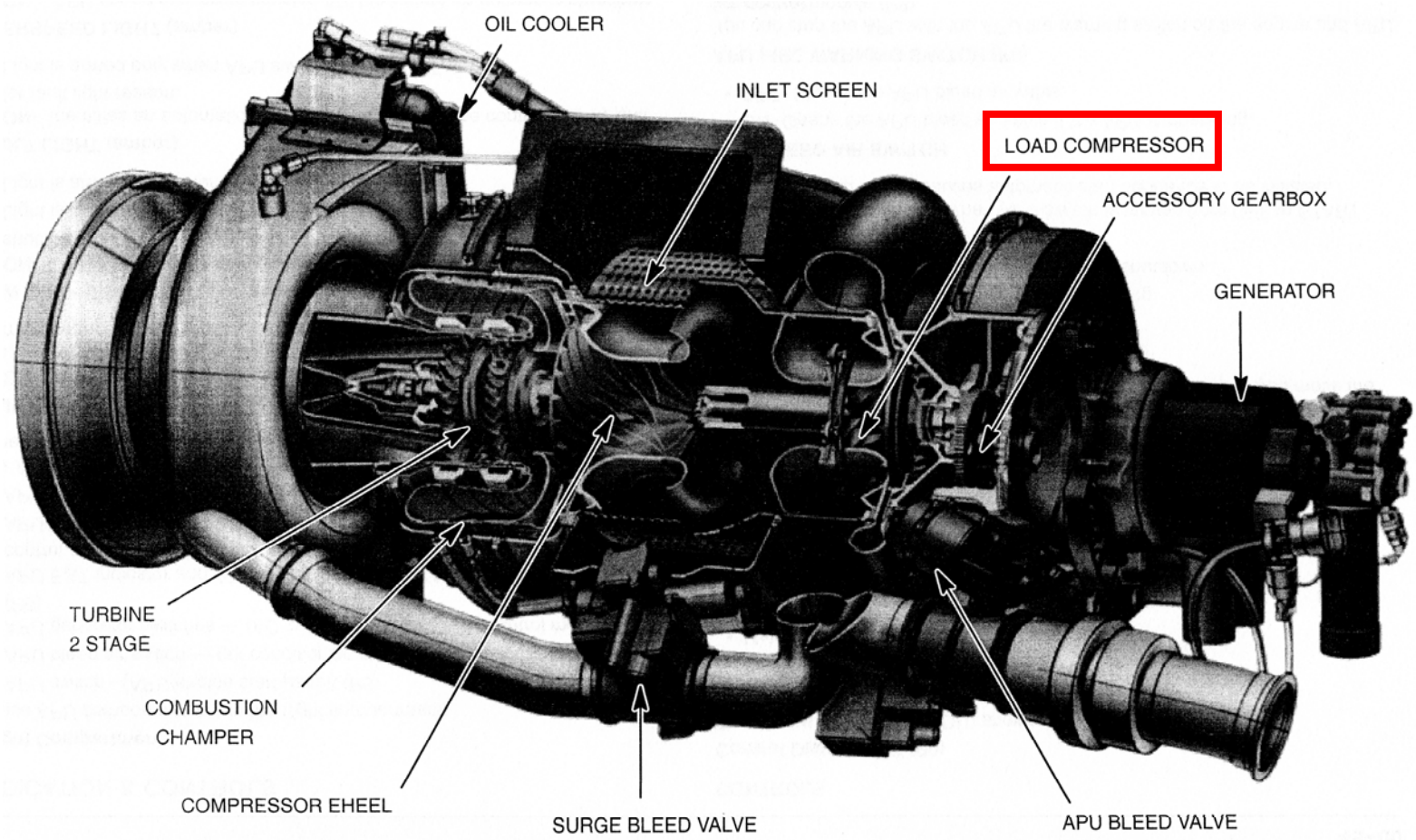

Boeing 787 – Bleedless APU

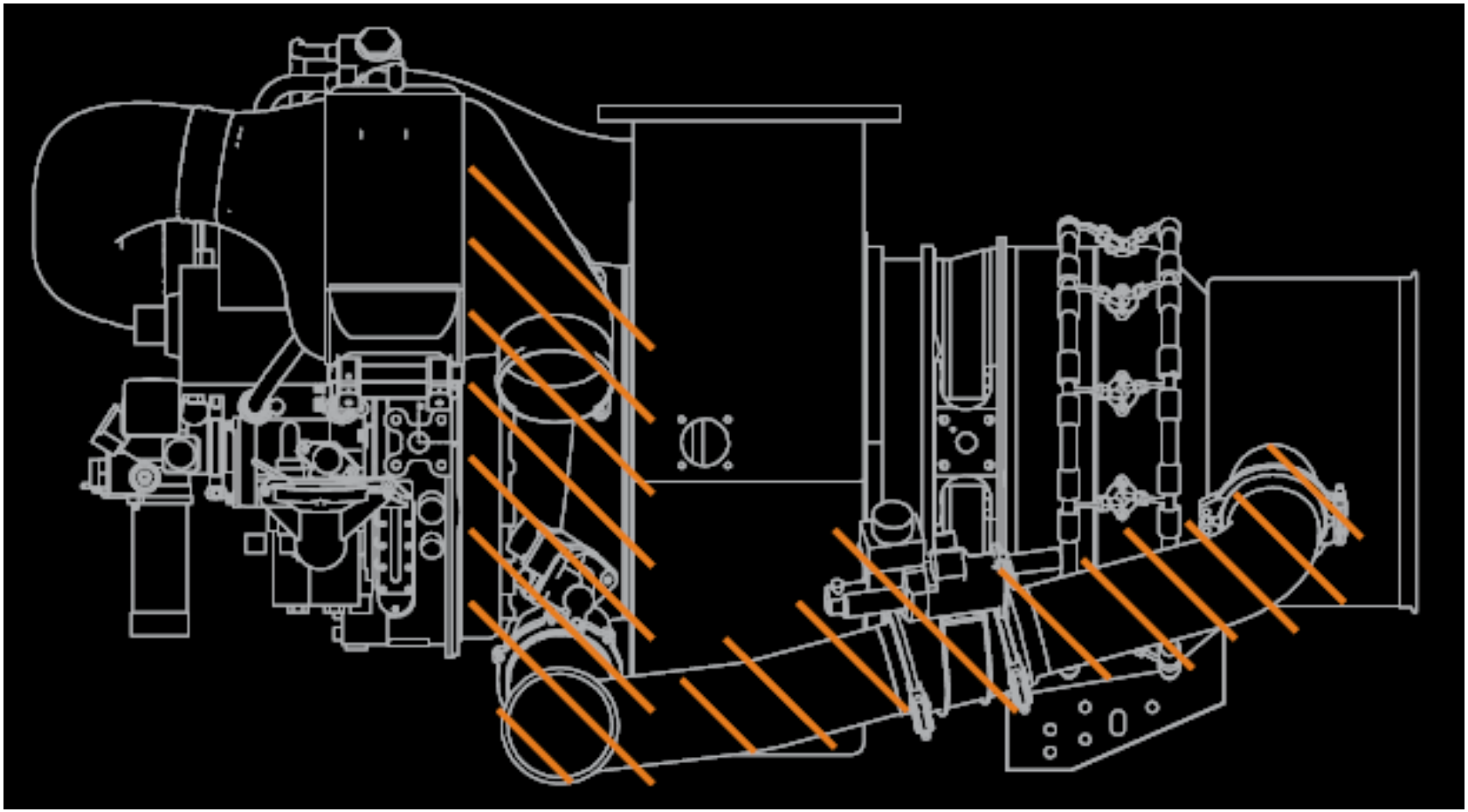

APU Ground Operation

On airports without ground supply of electricity, conditioned air, or compressed air:

- The APU may be started some time before boarding to cool down or to heat up the cabin.
- The APU provides electricity on ground
- The APU supplies bleed air to start at least one of the main engines. Other engines can be started from bleed air of the first running engine or also from the APU.
- Once the engines are running, the APU is switched off.
- When the aircraft taxies in, the APU can be started before the engines are shut off to take over the supply with secondary power.

On airports with ground supply of electricity:

- The APU can be switched off for most of the turn around time.
- The APU is necessary shortly before the flight to cool down or to heat up the cabin.
- The APU is necessary to start the engines.

On airports with ground supply of electricity and conditioned air:

- The APU is necessary to start the engines.

On airports with ground supply of electricity and compressed air:

- The APU is not necessary.

APU Operation

A320 Service Points

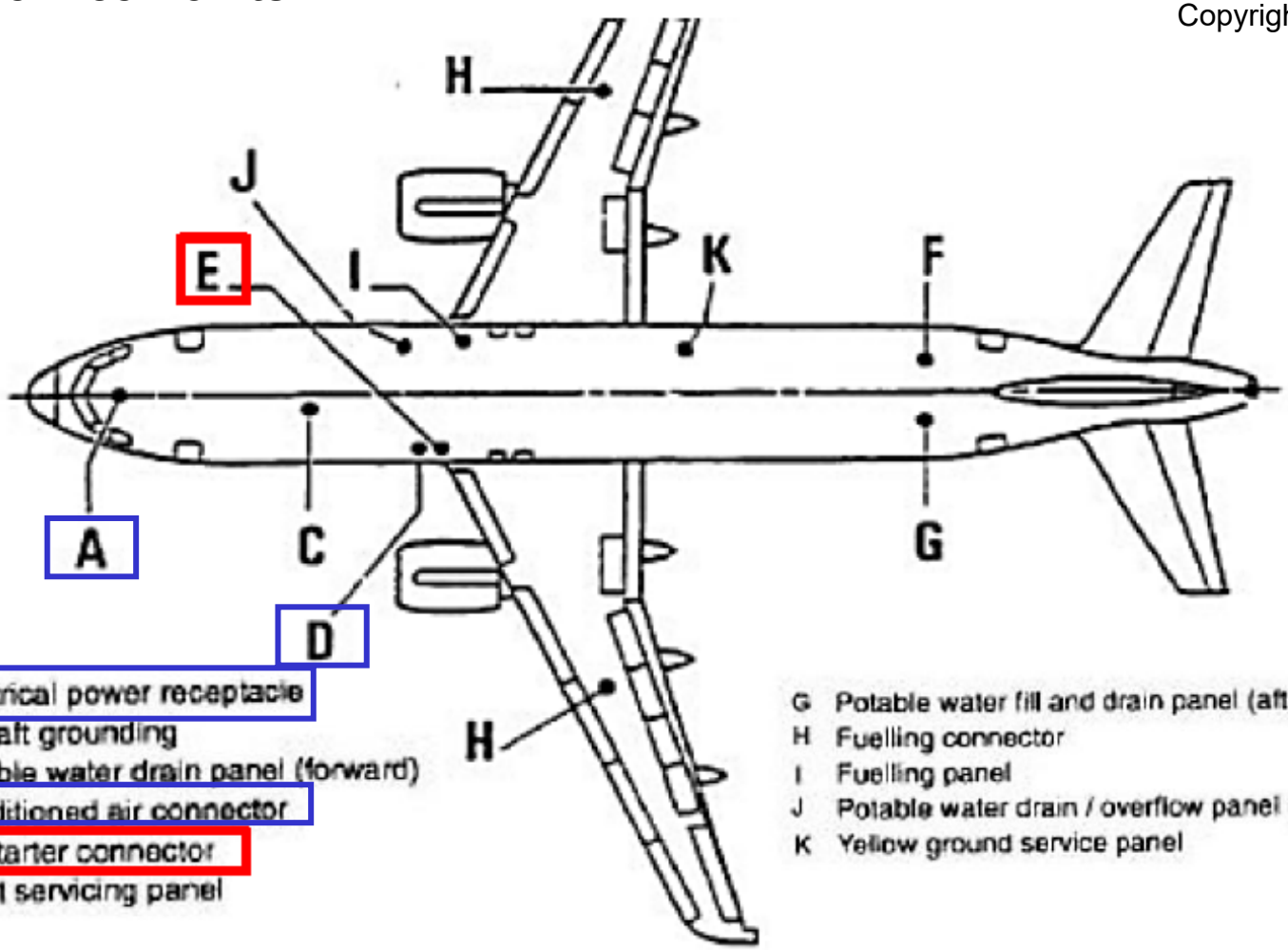

A Electrical power receptacle
B Aircraft grounding
C Potable water drain panel (forward)
D Conditioned air connector
E Air starter connector
F Toilet servicing panel
G Potable water fill and drain panel (aft)
H Fuelling connector
I Fuelling panel
J Potable water drain / overflow panel (centre)
K Yellow ground service panel

APU Operation

A320 Servicing (ATA 12)

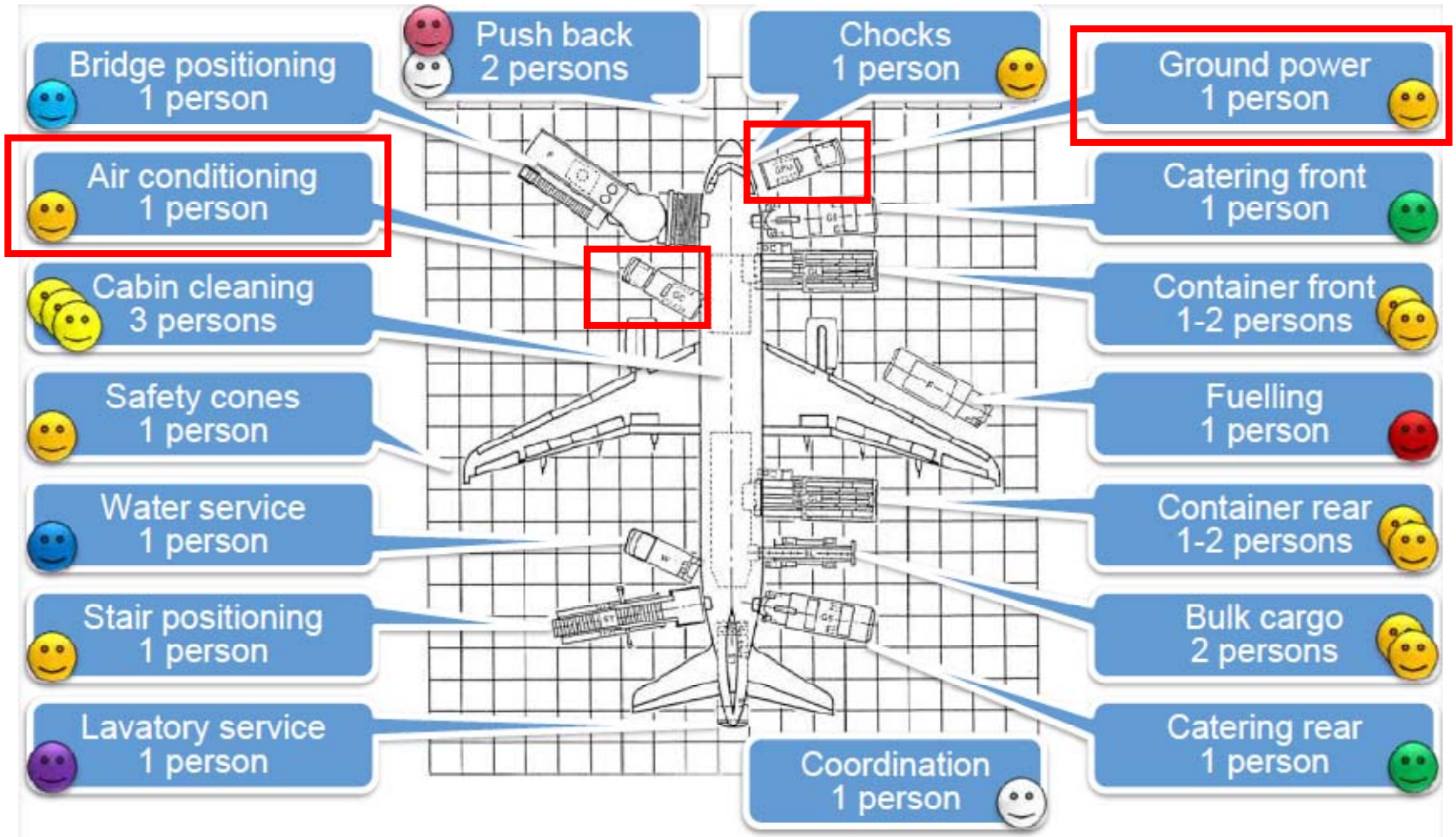

Turn Around Process – Ground Power

Many airports restrict the use of APUs on ground
=> Reduced air pollution and noise
=> **A ground power unit is connected <u>during the whole turnaround</u>**

Standard ISO connectors for three phase 400Hz, 115/200V with 90 kVA max.

A320 => 1 connection
A330 => 2 connections
A380 => 4 connections
Plugs are close to the NLG

The A380 plugs at 2.59m height can only be reached
with a ladder or using a tractor to climb

Turn Around Process – PreConditioned Air

Many airports restrict the use of APUs on ground
=> Reduced air pollution and noise
=> **Preconditioned air is necessary**

Connected with **thick yellow hoses**
A320 => 1 hose
A330 => 2 hose
A380 => 4 hose

Sockets are located at the belly fairing

Airbus is working with GSE manufacturers on **subfreezing** PreConditioned Air **(PCA)** units

APU Operation

Ground Operation with GSE

Preconditioned Air Unit
(Zürich Airport)

Air Start Unit MSU 400 (Reinmetall)

GSE = Ground Support Equipment

Aircraft Ground Power Unit
TLD GPU-409-E-CUP 90 kVA Diesel

Ground Operation with Airport Supply

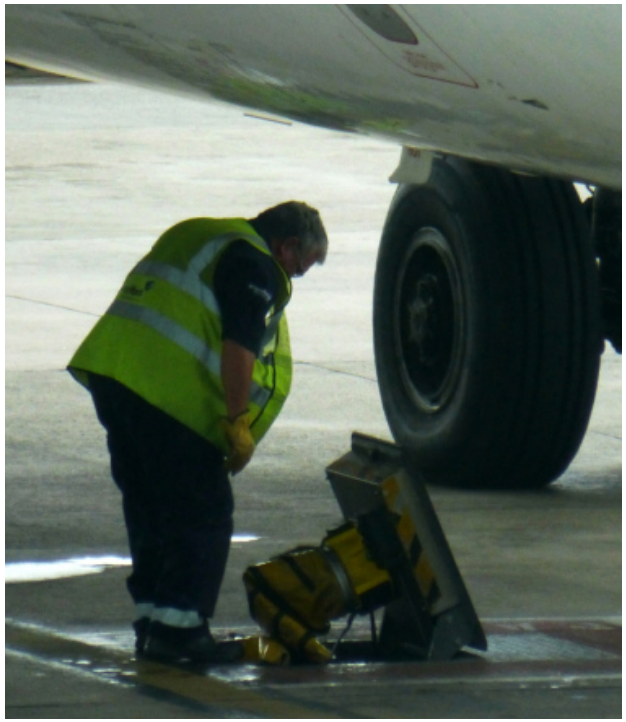

Preconditioned air supplied directly from the airport

Ground Operation with Airport Supply

Electrical power supplied directly from the airport

APU Operation

Ground Operation

Unitron UFC-90M 90 kVA 400 Hz AC Aircraft Frequency Converter

APU In-Flight Operation

APU during ETOPS flights

- "If the airplane type certificate requires an APU but does not normally require the APU to operate … the certificate holder must … ensure that the **APU will continue to provide the performance and reliability established** by the manufacturer."
  (**FAA ETOPS certification rules**)
- The Minimum Equipment List for the Airbus **A330** shows that it is **certified to fly ETOPS missions up to 120 minutes without APU**. (In comparison, the maximum ETOPS rating of the A330 with APU is 240 minutes.)

APU to help maintain maximum thrust

- If maximum take-off thrust is needed the APU can operate to supply bleed air for air conditioning and wing anti-icing

APU as emergency backup power

- Applied as such for aircraft with only two engines.

APU In-Flight Operation

Example of **ETOPS flight**
(Hamburg to San Francisco)
with the Airbus A330
without an APU
based on 120 minutes of ETOPS.

Stakeholder Views of the APU

Pilot's view:

- Pilots don't want to have to do anything extra to get the job done, like keeping the main engines running for a little longer or waiting for the ground crew to provide secondary power as a ground service. **The APU helps pilots to get the job done.**

Airline's view:

- Keep the schedule and make a profit. **The APU is just a cost factor**.

Manufacturer's view:

- The focus is getting the aircraft certified and sold. Today the APU is a default part.

APU manufacturer's view:

- Selling APUs is their way of generating income. Ground Service Equipment, GSE is a competitor to the APU.

Airports's view:

- Airports face much criticism from neighbors. For this reason, airports have a natural tendency to improve the situation (**APU restrictions**). Many airports have set regulations on how long the APU is allowed to run, both before take-off and after landing (e.g. London Heathrow and Zürich).
- Power generated at the airport (or in a central power plant) can be done in a more environmentally friendly way compared to power generation on board an aircraft.
- The airport has an interest to sell ground support services.

Stakeholder Views of the APU

Airports's view (continued):

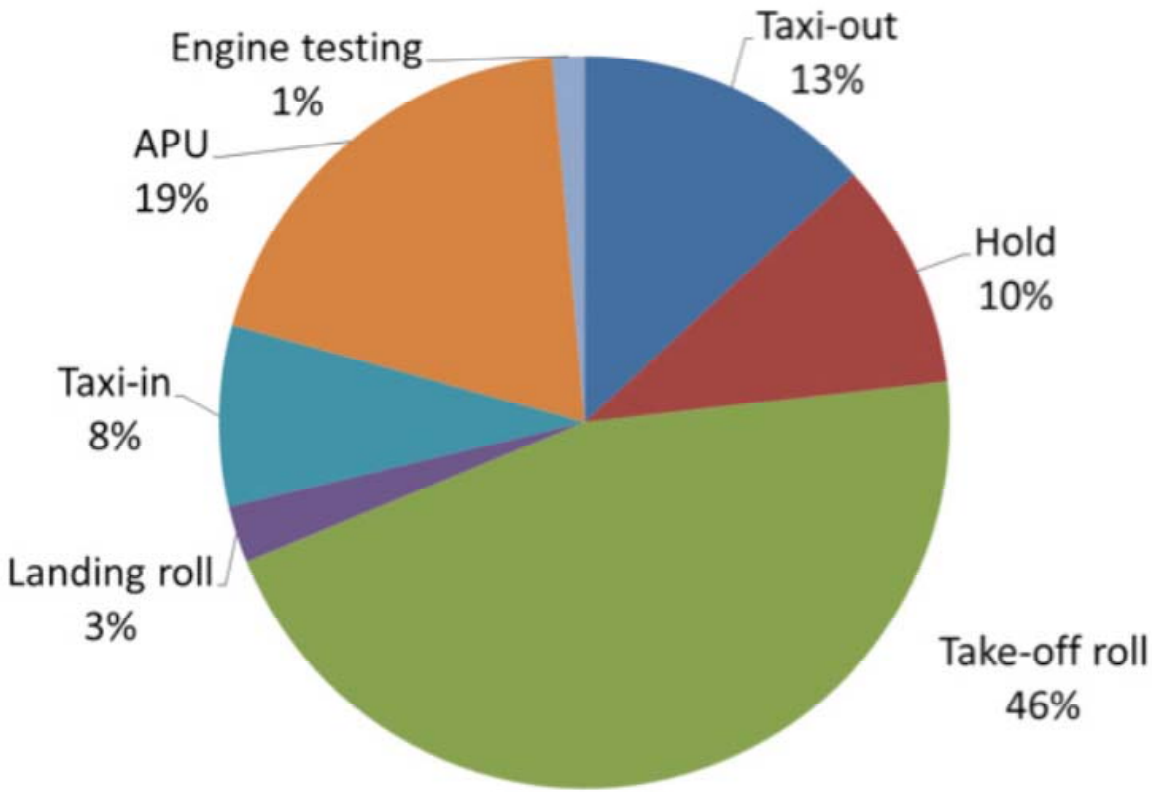

Estimated ground level emissions from aircraft at Heathrow Airport in 2010

Stakeholder Views of the APU

Airports's view (continued):

Example: Barcelona Airport (BCN) – **APU Operating Restrictions**

At Stands in contact with terminal:
It is **obligatory the use of the 400 Hz facilities**. The use of the **air-conditioning facilities** will be **obligatory** when the aircraft air conditioning is needed. The use of the aircraft **APU is forbidden** in these stands in the period between **2 minutes after blocks for the arrivals and 5 minutes before off-blocks for departure**. The aircraft APU will only be able to be used when the fixed units are not operative and the mobile units are not available.

Boeing: "Airports with Noise and Emissions Restrictions"
http://www.boeing.com/commercial/noise

651 airports listed among them 137 **airports with some kind of APU restriction: 21 %**

APU Data

Table 1: Passenger aircraft and their APUs

aircraft type	MTOW [kg]	range [km]	APU Type	APU dry mass [kg]	shaft power [kW]	power-to-mass ratio [kW/kg]	APU dry mass/MTOW [%]
B737-600	66.000	5970	Honeywell 131-9B	145	447	3,09	0,22
B737-700	70.080	6370	Honeywell 131-9B	145	447	3,09	0,21
B737-800	79.010	5765	Honeywell 131-9B	145	447	3,09	0,18
B777-200	247.200	9700	Honeywell 331-500B	310	895	2,89	0,13
B777-300	299.370	11120	Honeywell 331-500B	310	895	2,89	0,10
B787-8	227.930	14500	Hamilton Sundstrand APS5000	245	820	3,35	0,11
B787-9	252.651	15327	Hamilton Sundstrand APS5000	245	820	3,35	0,10
B787-10	252.651	13000	Hamilton Sundstrand APS5000	245	820	3,35	0,10
A318	68.000	5780	Honeywell 131-9A	145	447	3,09	0,21
A319	75.500	6850	Honeywell 131-9A	145	447	3,09	0,19
A320	78.000	6100	Honeywell 131-9A	145	447	3,09	0,19
A321	93.900	5950	Honeywell 131-9A	145	447	3,09	0,15
A330-200	242.000	13400	Honeywell 331-350	250	745	2,98	0,10
A330-300	242.000	11300	Honeywell 331-350	250	745	2,98	0,10
A340-500	380.000	16670	Honeywell 331-600	307	895	2,91	0,08
A340-600	380.000	14600	Honeywell 331-600	307	895	2,91	0,08
A350-800	248.000	15300	Honeywell HGT1700	335	1268	3,78	0,14
A350-900	268.000	14350	Honeywell HGT1700	335	1268	3,78	0,13
A350-1000	308.000	14800	Honeywell HGT1700	335	1268	3,78	0,11
A380-800	569.000	15200	P&W CANADA PW980A	447	1342	3,00	0,08

APU Statistic

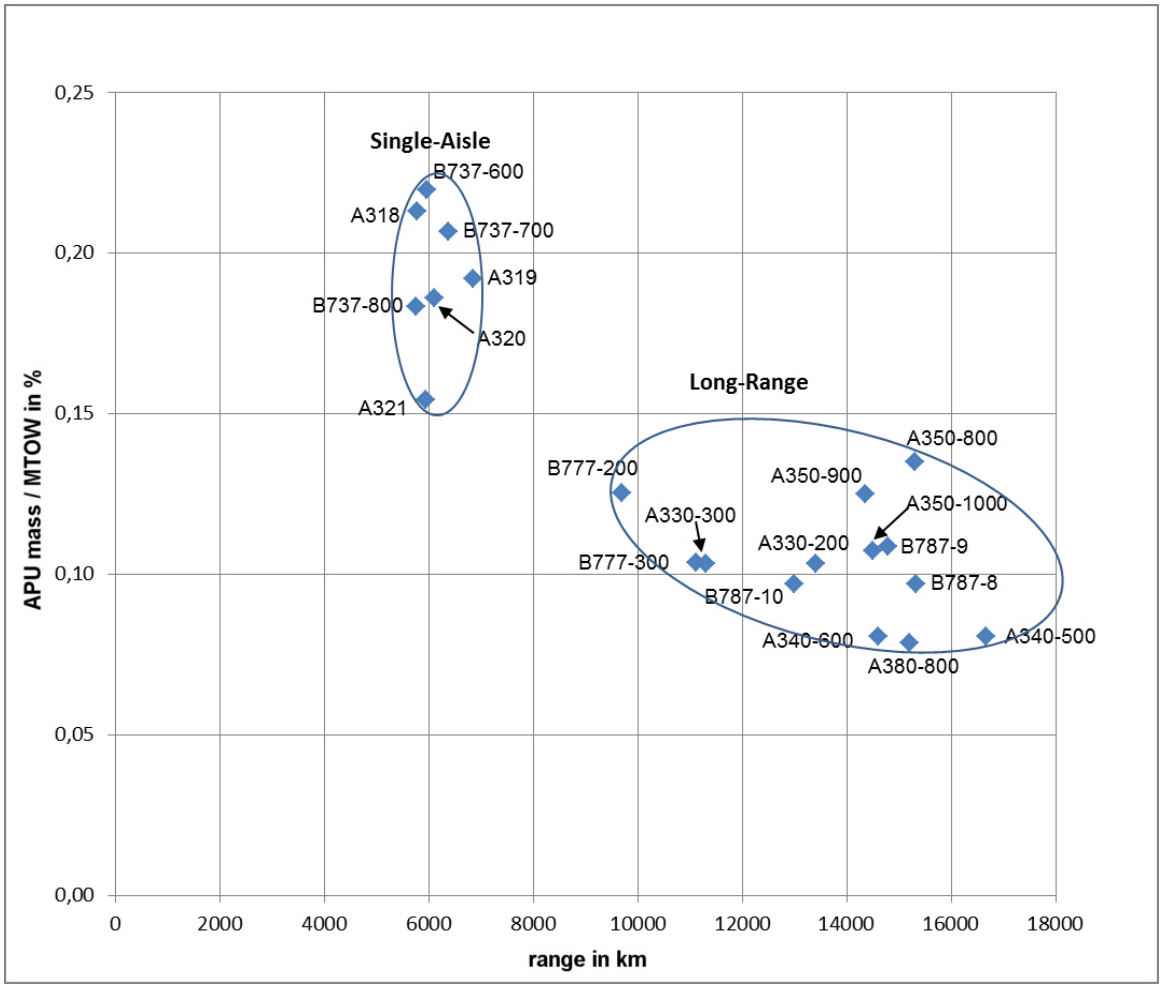

Potential Savings without an APU

Saving Mass without an APU

A: **Deinstallation of the APU and all Line Replaceable Units (LRU).** This option allows for a quick reinstallation of the APU and offers the greatest flexibility. Deinstallation or reinstallation of the APU can be done by two workers in one shift. Prerequisite is to insert a "APU substitution kit" when the APU is deinstalled to hold all tubes, ducts, and wires in their proper position and to cover openings.

B: Deinstallation as in **case A plus deinstallation of almost all components**, tubes, ducts, and wires only in the tail cone. This would also eliminate the "APU substitution kit". Problematic are the generator wires that have no coupling at the fire wall. They are either left in place (as considered here) or could also be totally removed.

C: Deinstallation as in **case B plus deinstallation of all remaining components** also in the rest of the aircraft.

Saving Mass without an APU

Table 2: Estimating mass reductions of the A320 APU system

sub system	component	mass [kg]	case
APU	APU dry mass	-145,0	A
	dummy	15,0	A
	APU installation (structure)	-40,0	B
fuselage	tail cone (more lightweight design)	-60,0	C
air intake	air inlet ducts	-2,0	C
	air vane	-2,0	C
	air inlet with flap	-10,0	C
	flap actuator	-2,0	B
	possible dummy for flap actuator	0,5	B
exhaust	exhaust pipe and muffler	-10,0	C
fuel system	fuel pump	-15,0	A
	fuel lines inside the tail cone	-3,0	B
	fuel lines up to the cross feed valve (including shroud & fasteners)	-60,0	C
oil system	oil	-5,0	A

Potential Savings without an APU

Saving Mass without an APU

Savings are for the APU deinstallation and for the three different cases from Table 2:

Only APU deinstallation:	-145 kg (for reference)
Case A deinstallation:	-188 kg (**1.3 times APU dry mass**)
Case B deinstallation:	-261 kg (**1.8 times APU dry mass**)
Case C deinstallation:	-630 kg (**4.3 times APU dry mass**)

Potential savings can also be estimated for all aircraft from Table 1, assuming the factors of 1.3, 1.8, and 4.3 would come out similarly also for APU installations of these other aircraft.

Saving Fuel without an APU

APU Operation on the ground

An APU of the size as used for the Airbus A320 consumes **2 kg of fuel per minute**. Without an APU this fuel is saved and the environment is by this amount less polluted with benefits to the air quality in the vicinity of the airport. For a short turn around of **30 minutes** achievable with a single aisle aircraft **60 kg** of fuel can be saved for each flight. Fluctuating fuel cost during the last years can be averaged to 1 USD/kg. So, financial savings are **60 USD**.

Saving Fuel without an APU

Aircraft Operation in flight

The Aircraft is lighter without an APU. Fuel consumption is proportional mass and almost proportional to flight time (or distance).

$$m_F = m\,(e^{t_f \cdot k_E} - 1) \;, \quad k_E = \frac{c\,g}{E}$$

m_F : fuel mass to transport fixed mass m

m : mass to be transported (or saved)

t_F : flight time

c : specific fuel consumption e.g. 16 mg/N/s

E : glide ratio $E = L/D$ e.g. $E = 15$

g : earth acceleration, 9.81 m/s²

For a typical stage length (range) for a DOC calculation which is 50 % of the range at maximum payload (755 NM for the A320 flown in the stratosphere with M_{CR} = 0.76 yields 6235 s flight time) and mass saving for a **Case A deinstallation (188 kg)** results in fuel savings of **13 kg**. Financial savings are just **13 USD**.

Potential Savings without an APU

Saving Costs without an APU

Depreciation is calculated over 15 years with a residual value of 10 %. System purchase costs are estimated based on system mass with 2000 USD/kg. Eliminating 188 kg (Case A) would save 376000 USD which is equivalent to depreciation of 22560 USD per year or **22 USD** per flight.

Maintenance parameters are estimated from http://afs.ProfScholz.de for ATA 49:

Maintenance Man Hours per Flight Hour (**MMH/FH**) for **on aircraft** maintenance: 0.00290 1/FH

Maintenance Man Hours per Flight Hour (**MMH/FH**) for **off aircraft** maintenance: 0.02090 1/FH

Material Costs per Flight Hour (**MC/FH**): 2.85 USD/FH

Burdened labor costs are 69 USD per hour based on the year 1989.

Burdened labor costs corrected with 2.5 % per year up to 2015 increase to 131 USD.

Maintenance cost savings are 10400 USD per year or **10 USD** per flight.

All costs together savings are: 60 USD + 13 USD + 22 USD + 10 USD = **105 USD** per flight.

Saving Costs without an APU – Including Ground Services ???

If there is no APU on board at least the service for starting the engines needs to be purchased at the airport.

Ground Handling Costs at the small international airport **Münster-Osnabrück** (FMO) and convert 1 EUR = 1 USD. All **costs given for** (initiated) **30 minutes** (e.g. for one turn around)

- One **ground handler** acting is 22.50 USD.
- **Cabin heating** is 84.50 USD without labor.
- A Ground Power Unit for **electrical supply** 400 Hz, 90 kVA is 46 USD without labor.
- For an **air starter** charges are 152.50 USD without labor for one aircraft start. This
- yields **minimum 175 USD to get the aircraft started** (equipment and labor).
- Let's assume if the worker is paid 30 minutes for aircraft starting,

  the remaining time can be used to get also other services in place (if needed).

=> there is no financial benefit. **Money spent for ground services** (at least to German expensive standards ` a` least without Service Level Agreement) **more than compensates ... savings earned by flying without an APU on a typical mission of a single aisle aircraft.**

Saving Costs without an APU – Including Ground Services ???

Here is an **alternative reasoning** with less numbers:

- Air starters are often built by mounting an aircraft APU on a truck. Eliminating the APU on board and replacing it with an APU on the ground has the advantage of not keeping the APU's mass airborne, otherwise with respect to fuel usage of the APU, **depreciation and maintenance costs** there are **little differences if we assume usage of the APU on board and on the ground is the same.**
- But **applying an APU on the ground has the disadvantage to pay for an additional ground handler** (whereas the pilot is operating the APU by pressing some buttons as part of the job of flying the aircraft).
- We calculated above fuel savings of 13 USD for a 1.73 hour flight. That is 7.5 USD savings for each hour of the flight. If a ground handler charges 22.50 USD to get the APU related jobs for a turnaround done, **we would need to fly here at least 3 hours to break even for the aircraft without an APU**.
- In countries with lower wages required flight time to break even will be lower.

Potential Savings without an APU

Saving Costs without an APU

Mass savings can be used for different options:

1. fly lighter and save fuel
2. put in more fuel and fly further
3. **put in more payload and earn more** (this option is only possible when flying ranges longer that range at maximum payload, otherwise payload is limited by maximum zero f fuel mass, MZFW)

Applying option 3 and Case A means payload could be increased by 2 passengers (including luggage)!

Costs to fly the 2 passengers is about: 260 USD (AEA Method).

Revenue should be higher.

Saving Costs without an APU – Increasing Payload

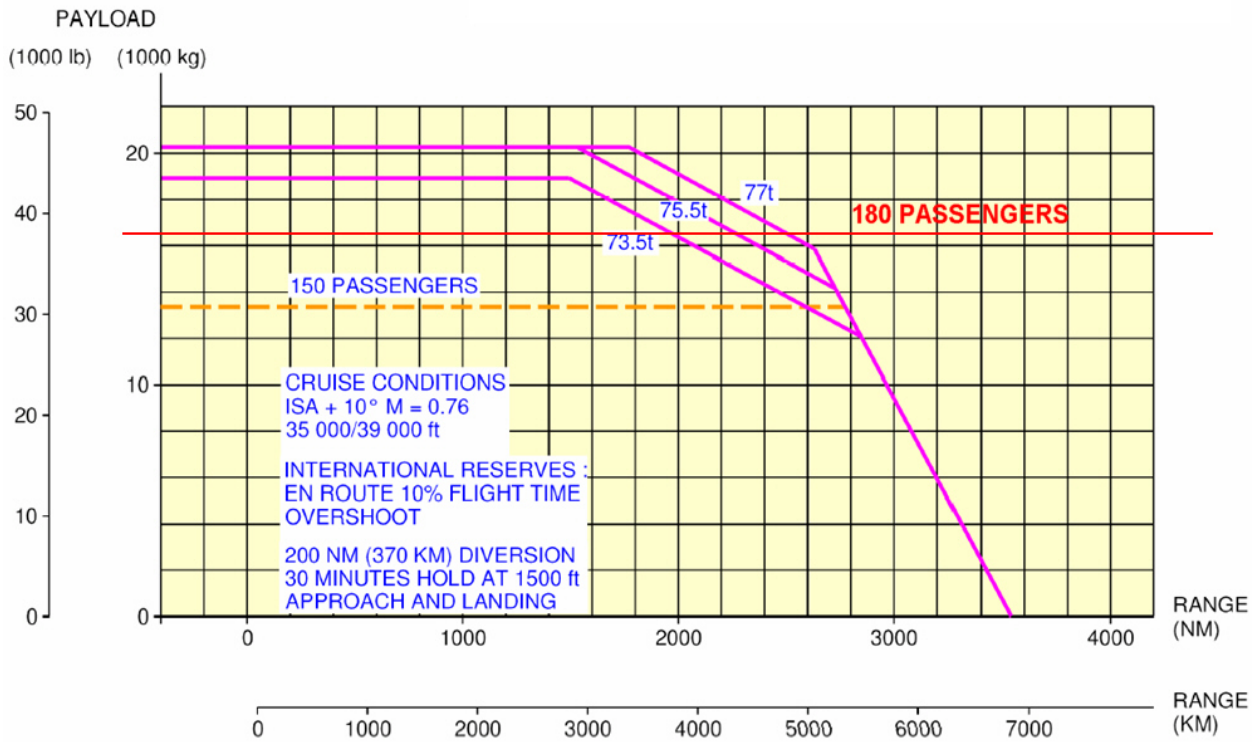

Airbus A320 Payload-Range Diagram. Only at longer ranges where the purple lines fall below the red line (for 180 passenger) can the aircraft without APU show its increased payload capabilities.

APU Alternatives: Air Bottle, FPLG, Fuel Cell

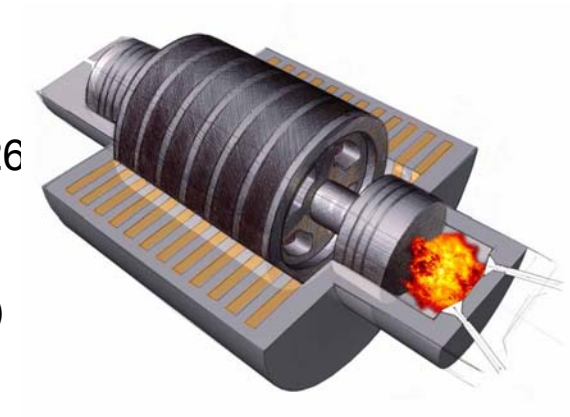

1.) **Engine Starting**: **Air bottle**: Patent, Lockheed, 1963:
System for starting gas turbine power plants (US3098626
Example: B707, DC-8.

2.) **Electric Power**: **Free-Piston Linear Generator** (FPLG)
DLR: http://goo.gl/IBd3H9

3.) **Electrical Power, Water and Inert Gas**: **Multifunctional Fuel Cell**
Airbus: http://goo.gl/S4vhl4

Power density PEM: 0.32 kW/kg
(APU, B787, APS 5000: 1.84 kW/kg)

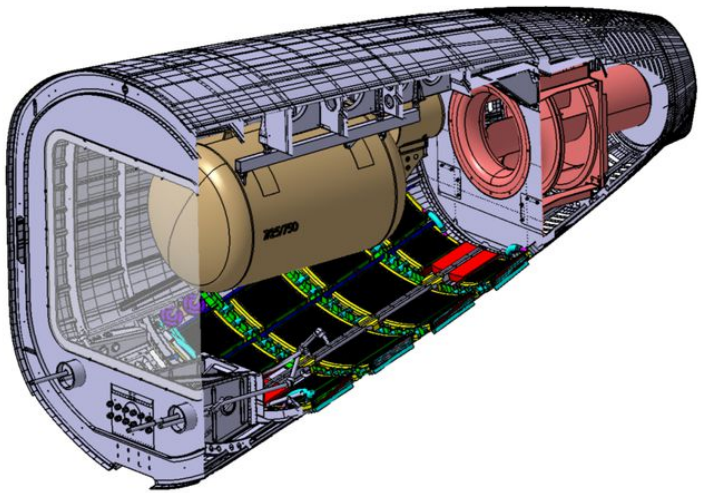

Summary and Conclusions

Summary

- Most aircraft do not need an APU; nevertheless they are equipped with one.
- This raises the question, why APUs have not been eliminated in a competitive environment like the airline business.
- The various stakeholders in aviation have been considered. No show stoppers where found why an APU should not be eliminated for an aircraft.
- The fact that APUs have not been eliminated indicates that there must be good reason for it:

  1.) **APUs bridge the transition** of a few minutes before airport electricity is made available.

  2.) **It costs less to operate the APU** than to buy services at the airport.

- **Especially airports are pressing for the use of their ground service equipment instead of using the APU. This has ecological reasons mixed with financial reasons.**

Summary and Conclusions

Conclusions

- It was found, **eliminating an APU has a considerable weight saving potential**. **However, it shows only limited/no financial savings** after comparing with the high costs charged for equipment and labor at the airport.
- Charges are necessary for ground service equipment that replaces the APU. Calculations show, **eliminating an APU would benefit the airline best if the aircraft is operated on quite long range routes** beyond the range at maximum payload.
- **Increasing payload has clear financial advantages over reducing weight and saving fuel.** Only in this way an aircraft without APU could show its economic and ecologic benefit over its benchmark.
- The hypothesis of this research that an aircraft type with an optional APU has economical and ecological advantages in operation was only proven for long range operations (long range with respect to each aircraft's capabilities).

- **When in the future even more (than 21 % of) airports restrict the use of the APU, it may make sense not to have an APU on board anymore.**

An Optional APU for Passenger Aircraft

Contact:

Info@ProfScholz.de

http://AERO.ProfScholz.de

References

[1] PETERSON, Johan: An Optional APU for Passenger Aircraft. Aircraft Design and Systems Group (AERO), Hamburg University of Applied Sciences, Project, 2014

[2] ALISCH, Tom: Alternativen zur Hilfsgasturbine (APU). Aircraft Design and Systems Group (AERO), Hamburg University of Applied Sciences, Project, 2014

http://library.ProfScholz.de

APU Noise Assessment at London Heathrow

- Although noise at stand is not a large component of aircraft ground noise during the day, at night, and when movements are at their lowest, noise from aircraft at stand can be audible at locations around the airport.

- To avoid producing noise on the ground, Heathrow will provide:

  Fixed Electrical Ground Power (FEGP) and Pre-Conditioned Air (PCA) at all aircraft stands, to avoid the need for aircraft to produce noise through using their APU whilst on-stand. As part of the Air Quality Mitigation Strategy, the airport will aim to reduce APU running times to a maximum of 40 minutes for wide-body jets and to 20 minutes for narrow-body jets;

- APUs are elevated sources which means that the performance of mitigation measures such as barriers and perimeter bunding is somewhat diminished unless they are of a significant height and width.

- APU (auxiliary power unit) restrictions – we have seen a drop in APU use over recent years, as well as increasing compliance with the relevant OSI. The increased availability of FEGP is the main way of reducing APU use and we will continue to assess the additional positive impact of using PCA.

- Compliance with maximum APU run time allowances on arrival and departure 2010: Compliance target was 85 %. Actual compliance was 91%.

Heathrow Airport Limited (Ed.): "Heathrow's North-West Runway, Air and Ground Noise Assessment". 18 June 2014. Contractor: AMEC Environment & Infrastructure UK Limited. – URL: http://your.heathrow.com/wp-content/uploads/2014/07/01-Heathrow-3RNW-Air-and-Ground-Noise-Assessment.pdf (2015-09-08)